OAI 221

Group Number:- 43

Group Members:-

1. Rahul
2. Rajnesh Kumar
3. Abhishek Bhooshan
4. Kabeer Kundra

INDRAPRASTHA INSTITUTE *of*
INFORMATION TECHNOLOGY **DELHI**

Schematic for Complex gate

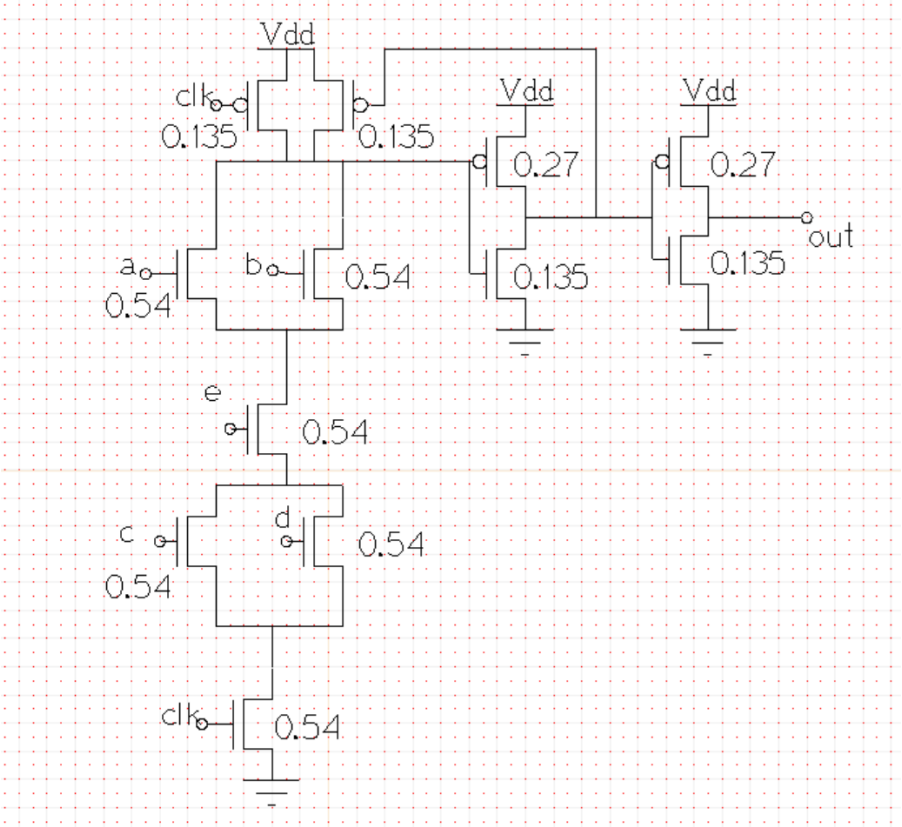

Complex gate layout

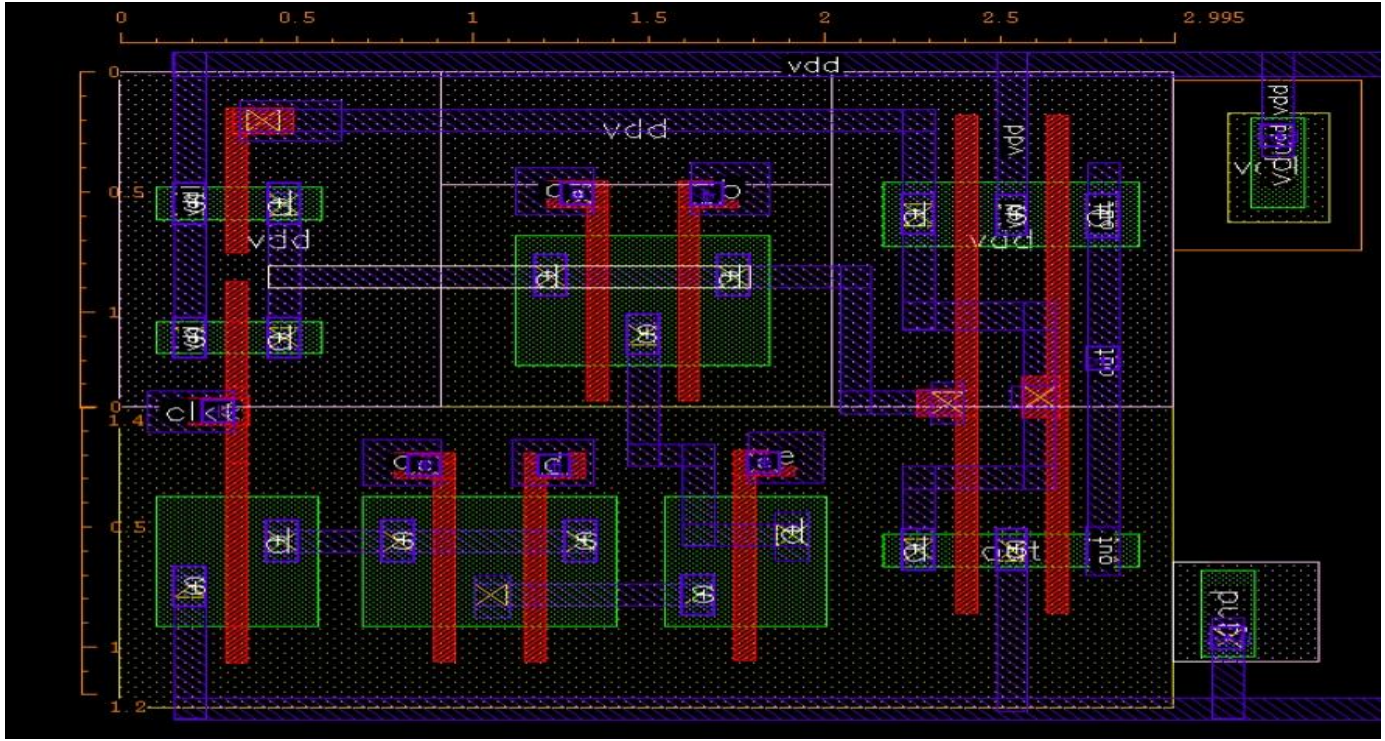

Area = 7.787um^2

Complex gate DRC LVS

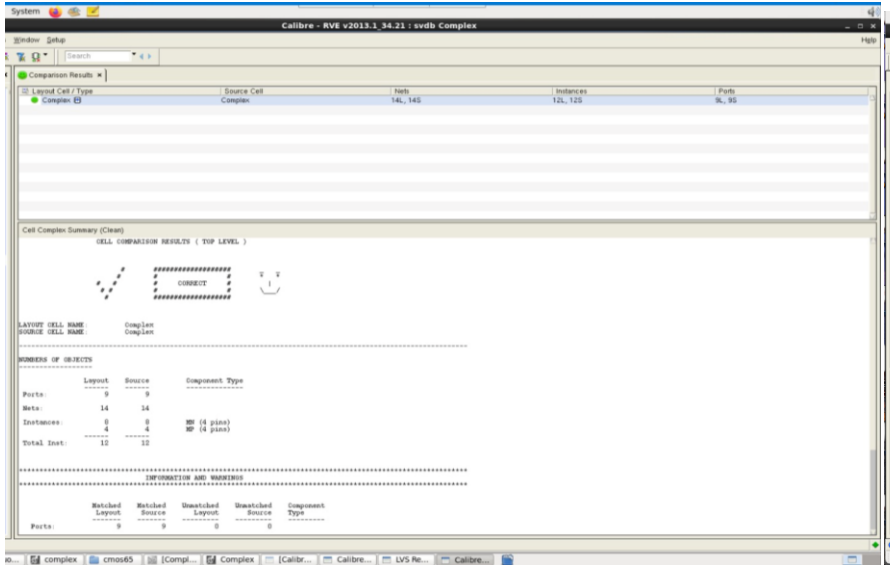

Clean LVS

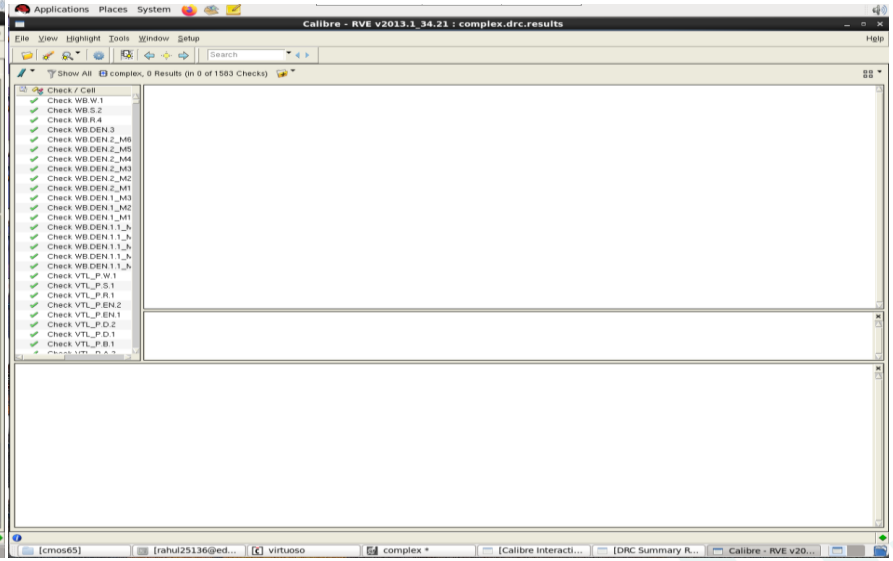

Clean DRC

Simulation for Complex gate

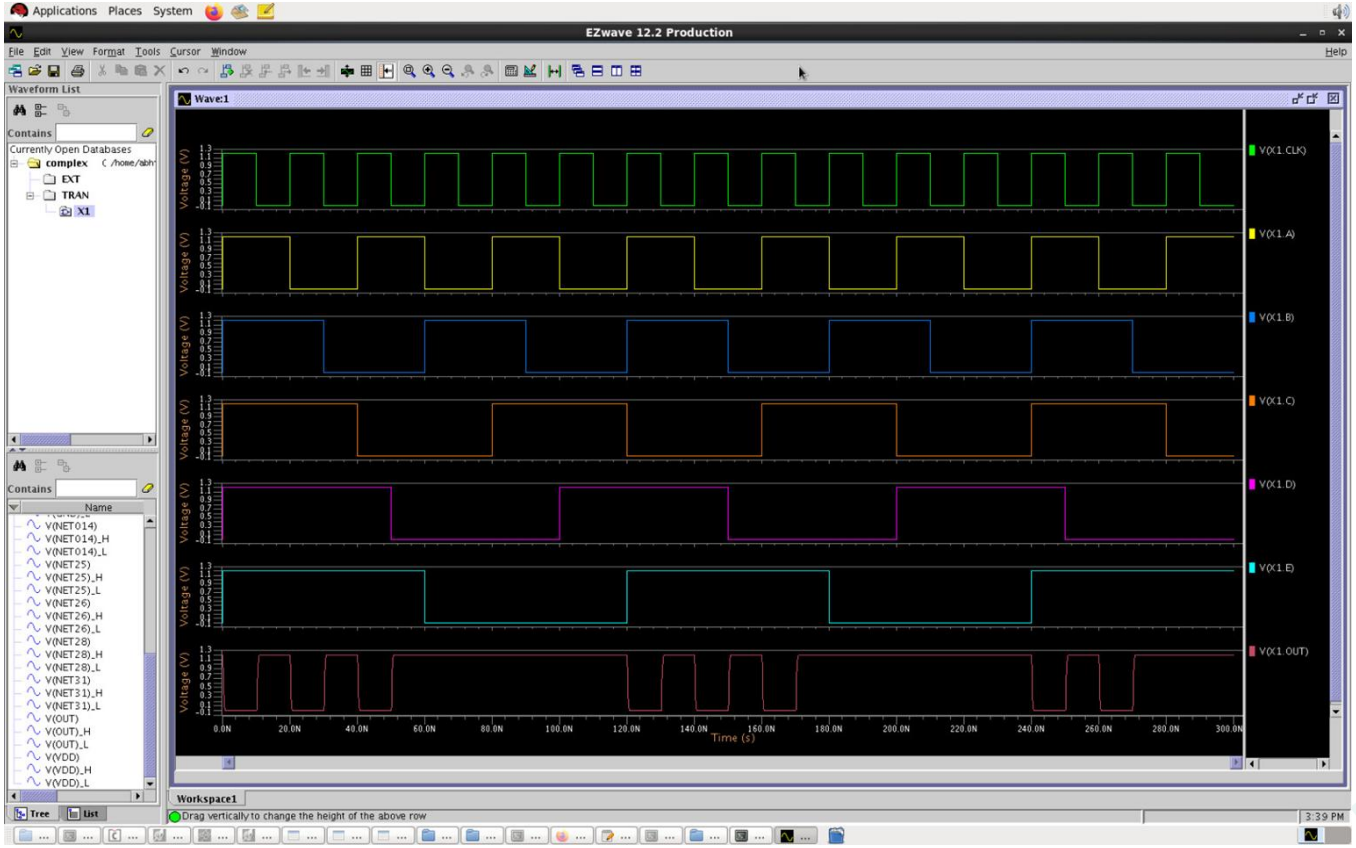

Schematic for Non-complex gate

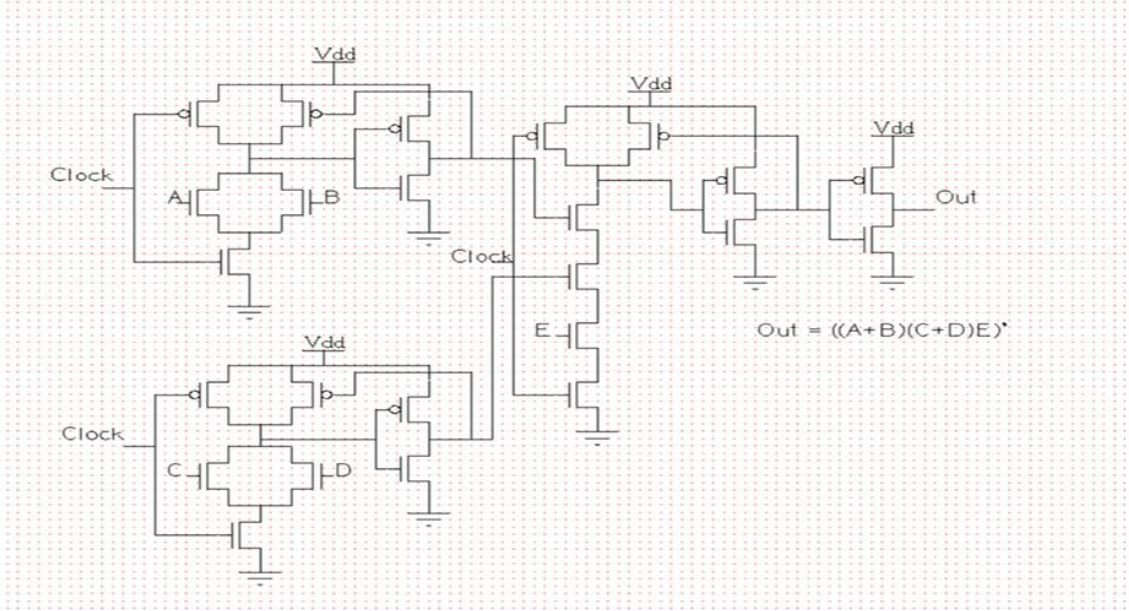

A,B,C,D,F, CLK Footer -> 0.135 um *2 = 0.27 um CLK Precharge -> 0.135 um CLK Keeper -> 0.135um * 2 = 0.270um E->0.135*4=0.54
Length of all nmos=0.06um

Non-Complex gate layout

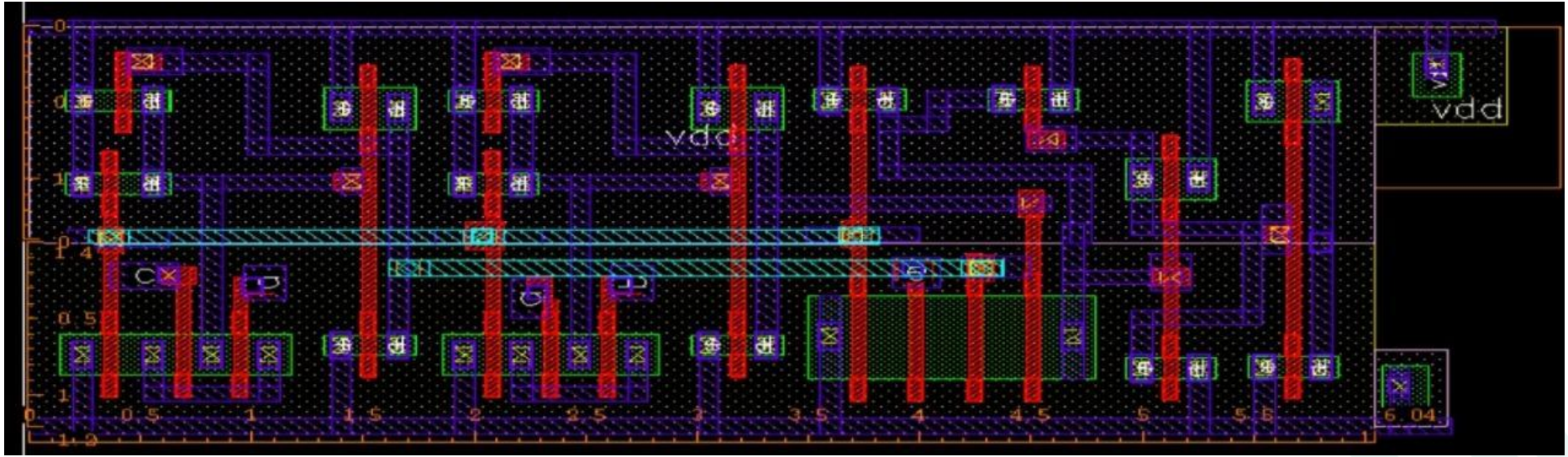

Area = 15.704 um^2

Non-complex gate DRC LVS

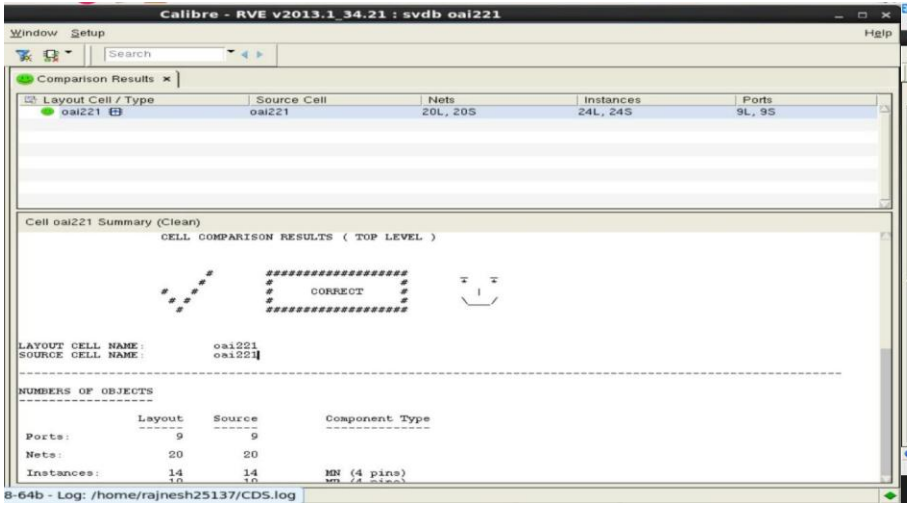

Clean LVS

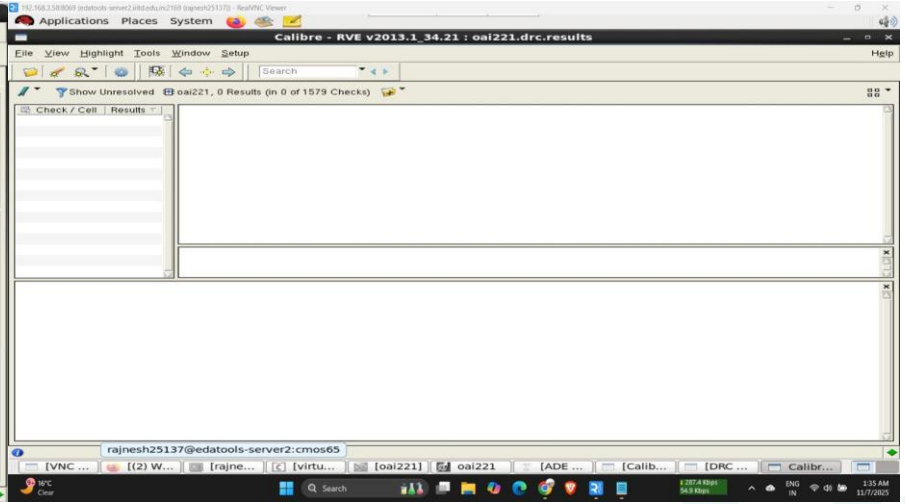

Clean DRC

Simulation for Non-complex gate

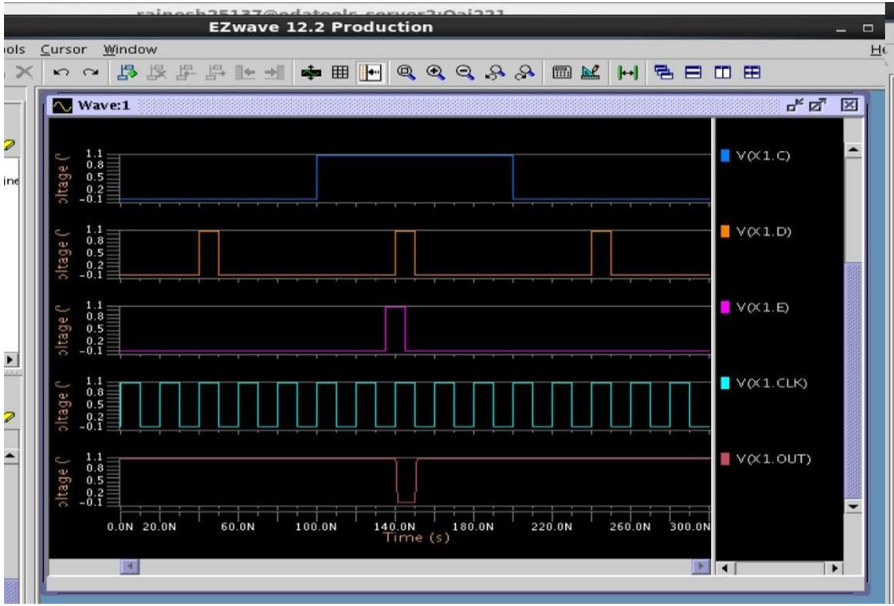

A=1,B=1,C=1,D=1,E=1 CLK=1,OUT=O AND A=0,B=0,C=0,D=1,E=0 CLK=1,OUT=1

Power dissipation (Pre and Post layout)

FF,1.32, 125	Power Pre (complex)	Power Post (complex)	Power Pre (Non - Complex)	Power Post (Non - Complex)
LEAKAGE	104.4 nA	115.27 nA	198.6 nA	207.4 nA
STATIC POWER	132 nW	139 nW	245 nW	271 nW
DYNAMIC POWER	68.3 uW	69.7 uW	73 uW	77.7 uW

Pre-Layout Vs Post Layout

- We have seen a significant change in Post Layout and Pre-Layout in Power.

Fall time (Pre and Post layout)

Corner	Time Pre (Non-complex)	Time Post (Non-complex)	Time Pre (Complex)	Time Post (Complex)
FF, 1.32, -40	0.19188	0.2019	0.19879	0.19981
FF,1.32, 125	0.21567	0.21171	0.22851	0.22994
TT,1.2,25	0.27022	0.28347	0.28232	0.29684
SS,1.08,25	0.37865	0.40403	0.40089	0.43778
SS,1.08,125	0.43029	0.43991	0.44873	0.49896

*Time in ns

Rise delay (Pre and Post layout)

Corner	Time Pre (Non-complex)	Time Post (Non-complex)	Time Pre (Complex)	Time Post (Complex)
FF, 1.32, -40	0.19967	0.21108	0.30290	0.32968
FF,1.32, 125	0.25624	0.23079	0.24083	0.24194
TT,1.2,25	0.30290	0.30379	0.2947	0.32576
SS,1.08,25	0.41658	0.40763	0.42005	0.46006
SS,1.08,125	0.42668	0.45764	0.6280	0.6359

*Time in ns

Monte Carlo Simulation

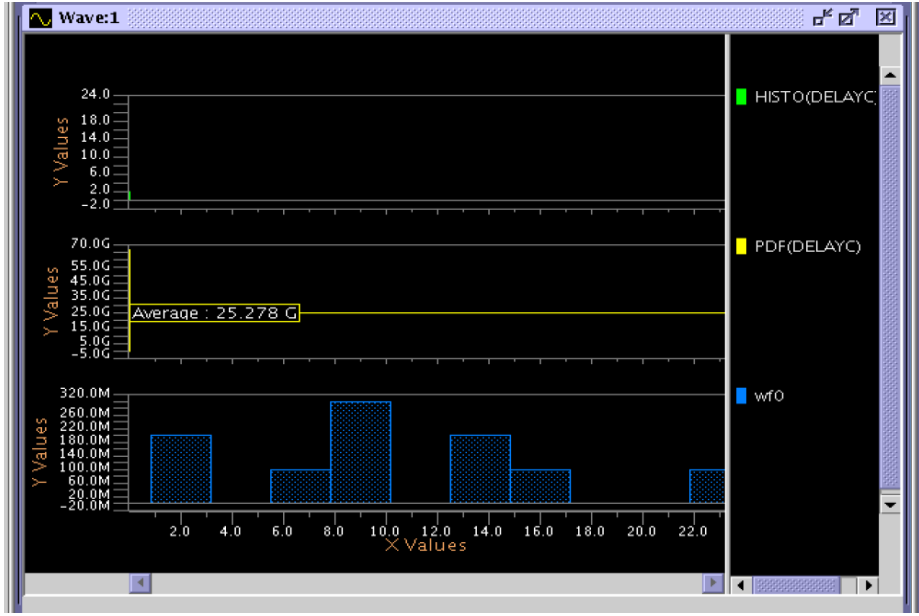

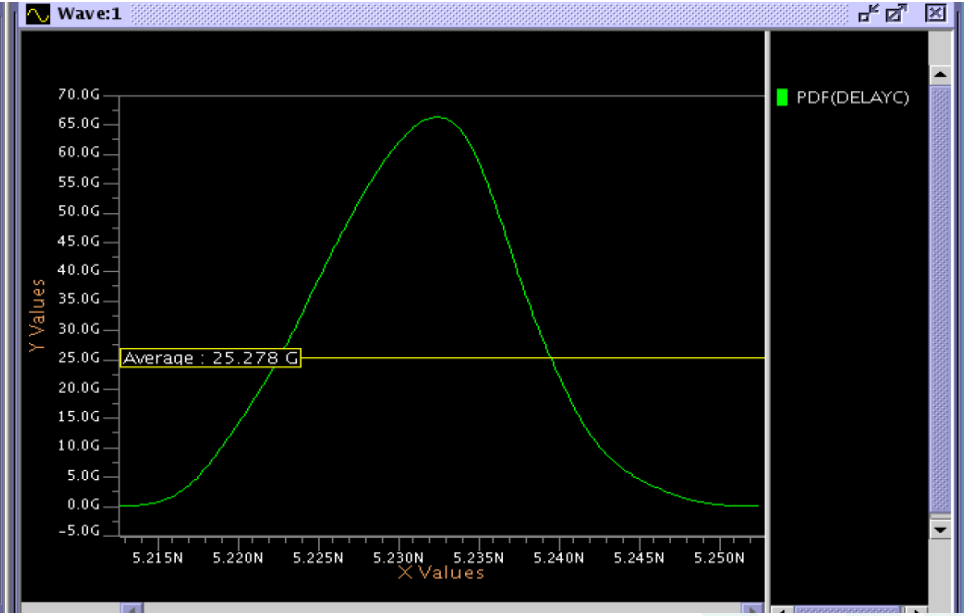

FF ,125 ,1.32 Non complex for C, PD average is 27.278 G we are getting delay of 5.23 ns

Complex vs Non-Complex

Complex Gate	Non-Complex Gate	Remarks
12 transistors	24 transistors	2x more transistors required in non-complex gate
Area = 7.787um^2	Area = 15.704um^2	Area is about doubled
Power = 69.839	Power =77.971	Power required by Complex gate is 12% less than a Non-Complex OAI221

Work distribution

- Rahul and Abhishek → Complex Gate and simulation

- Rajnesh and Kabeer → Non-complex gate and simulation